JOIST DETAILS

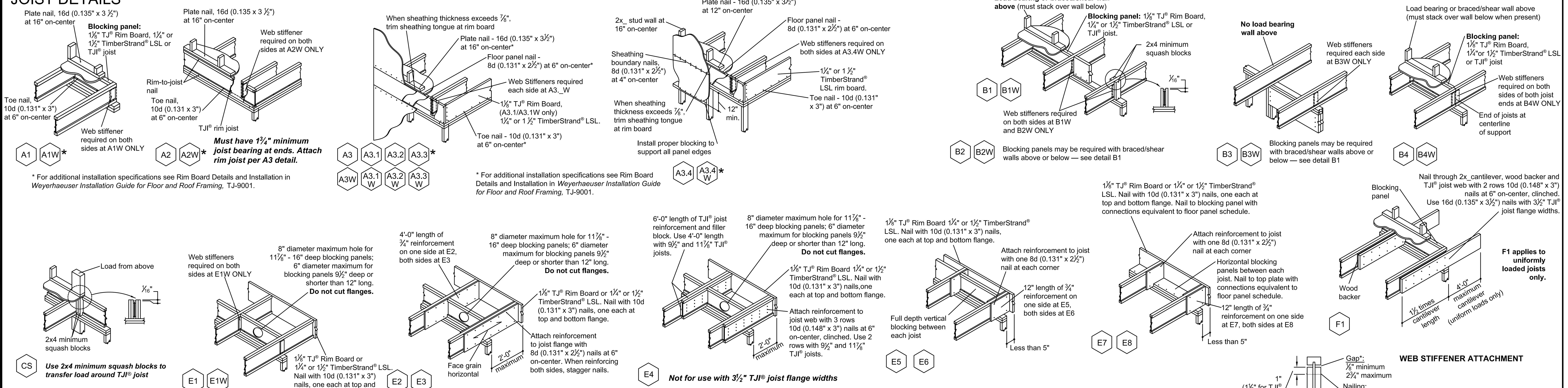

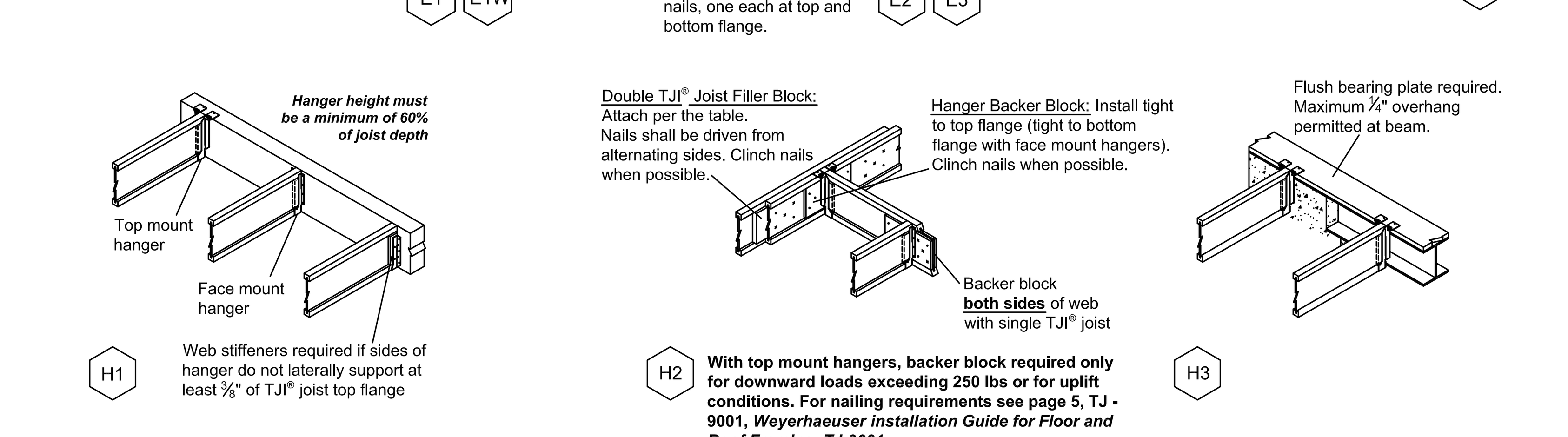

EXTERIOR DECK ATTACHMENT

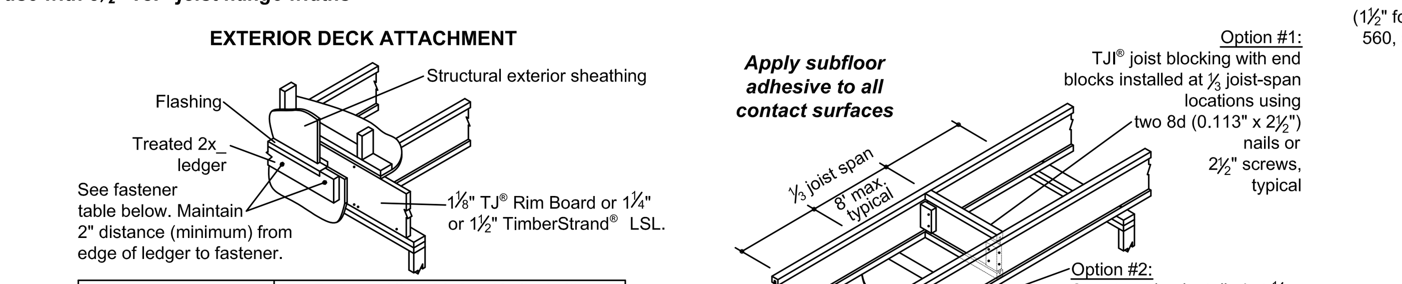

Rim Board Material	½" lag bolt	½" Through bolt	½" Through bolt with Air Space
	Fastener Allowable Load(2) (lbs/bolt)		
1⅛" TJ® Rim Board (3)	480	695	615(4)
1¼" TimberStrand® LSL	610	725	
1½" TimberStrand® LSL	675	725	

(1) Corrosion-resistant fasteners required for wet-service applications.
(2) Allowable load determined in accordance with ASTM D7672.
(3) 1⅛" TJ® Rim Board is allowed with joist depths ≤16" only.
(4) Maximum ½" shimmed air space.

LA

PB1 *When specified on the layout, one of the bracing options above is required*

WEB STIFFENER ATTACHMENT

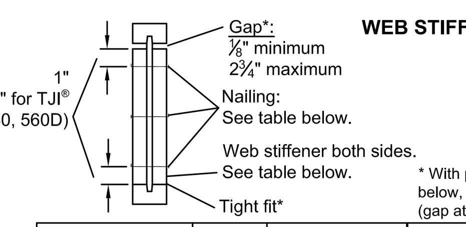

* With point load from above, and no support below, install web stiffener tight to top flange (gap at bottom flange)

TJI® Joist Series	Depth (in.)	Minimum Web Stiffener Size	Nailing Requirements: Type	Number Nails: End	Number Nails: Intermediate
110 210 230 & 360	All All All	⅝" x 2⁵⁄₁₆"(1) ¾" x 2⁵⁄₁₆"(1) ⅞" x 2⁵⁄₁₆"(1)	8d (0.113" x 2½")	3	3
560	All	2x4 (2)	16d (0.135" x 3½")		
560D	18" 20" 22"(3) 24"(3)	2x4 (2)	16d (0.135" x 3½")	4 5 6 6	4 5 11 13

W

(1) PS1 or PS2 sheathing, face grain vertical
(2) Construction grade or better
(3) Web stiffeners are always required for 22" and 24" TJI® 560D Joists

BEAM DETAILS

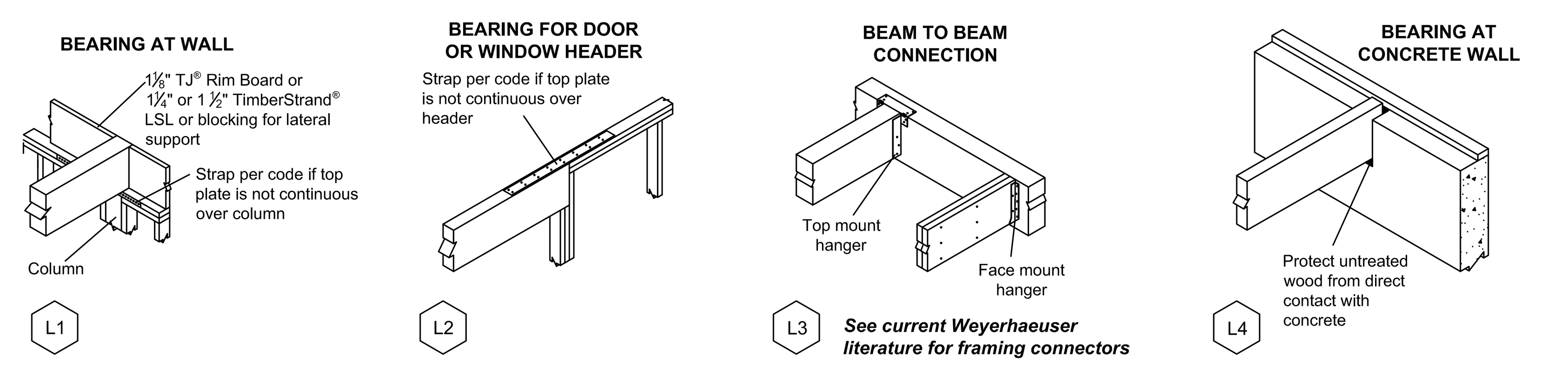

Multiple-Member Connections for Top-Loaded Beams

Fastener Installation Requirements

Piece Width	# of Plies	Fastener: Type(1)	Min. Length	# Rows	O.C. Spacing	Location
1¾"	2	10d nails	3"	3(2)	12"	One side
		12d-16d nails	3¼"	2(2)		
		Screws	3⅜" or 3½"	2	24"	
	3	10d nails	3"	3(2)	12"	Both sides
		12d-16d nails	3¼"	2(2)		
		Screws	3⅜" or 3½"	2	24"	Both sides
			5"			One side
	4	10d nails(3)	3"	3(2)	12"	One side (per ply)
		12d-16d nails(3)	3¼"	2(2)		
		Screws	5" or 6"	2	24"	Both sides
			6¾"			One side
3½"	2	Screws	5" or 6"	2	24"	Both sides
			6¾"			One side
		½" bolts	8"	2	24"	-

(1) 10d nails are 0.128" diameter; 12d-16d nails are 0.148" - 0.162" diameter; screws are SDS, SDW, USP WS, or TrussLOK®
(2) An additional row of nails is required with depths of 14" or greater.
(3) When connecting 4-ply members, nail each ply to the other and offset nail rows by 2" from the rows in the ply below.

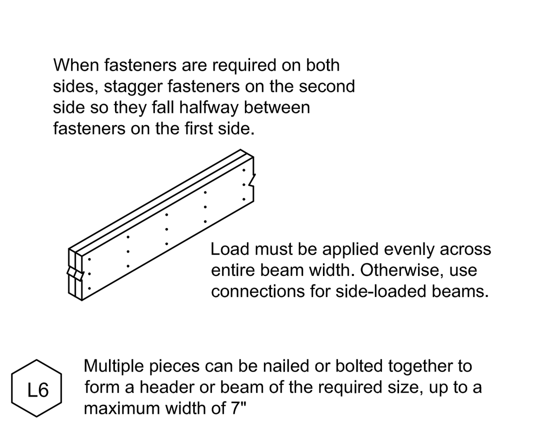

BEARING AT COLUMN

L5 **Verify column capacity and beam bearing length. See current Weyerhaeuser literature.**

COLUMN DETAILS

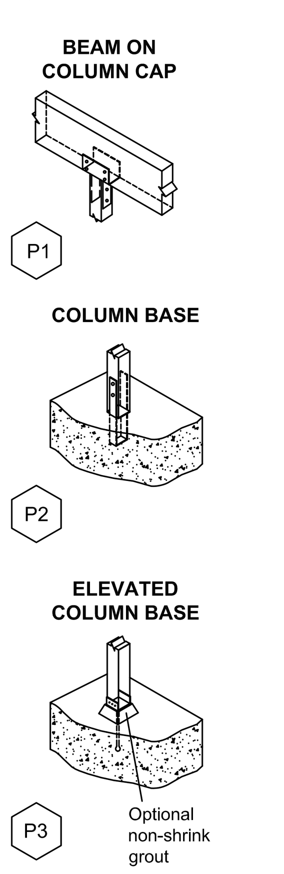

NAILING AT BEARING (FLOOR)

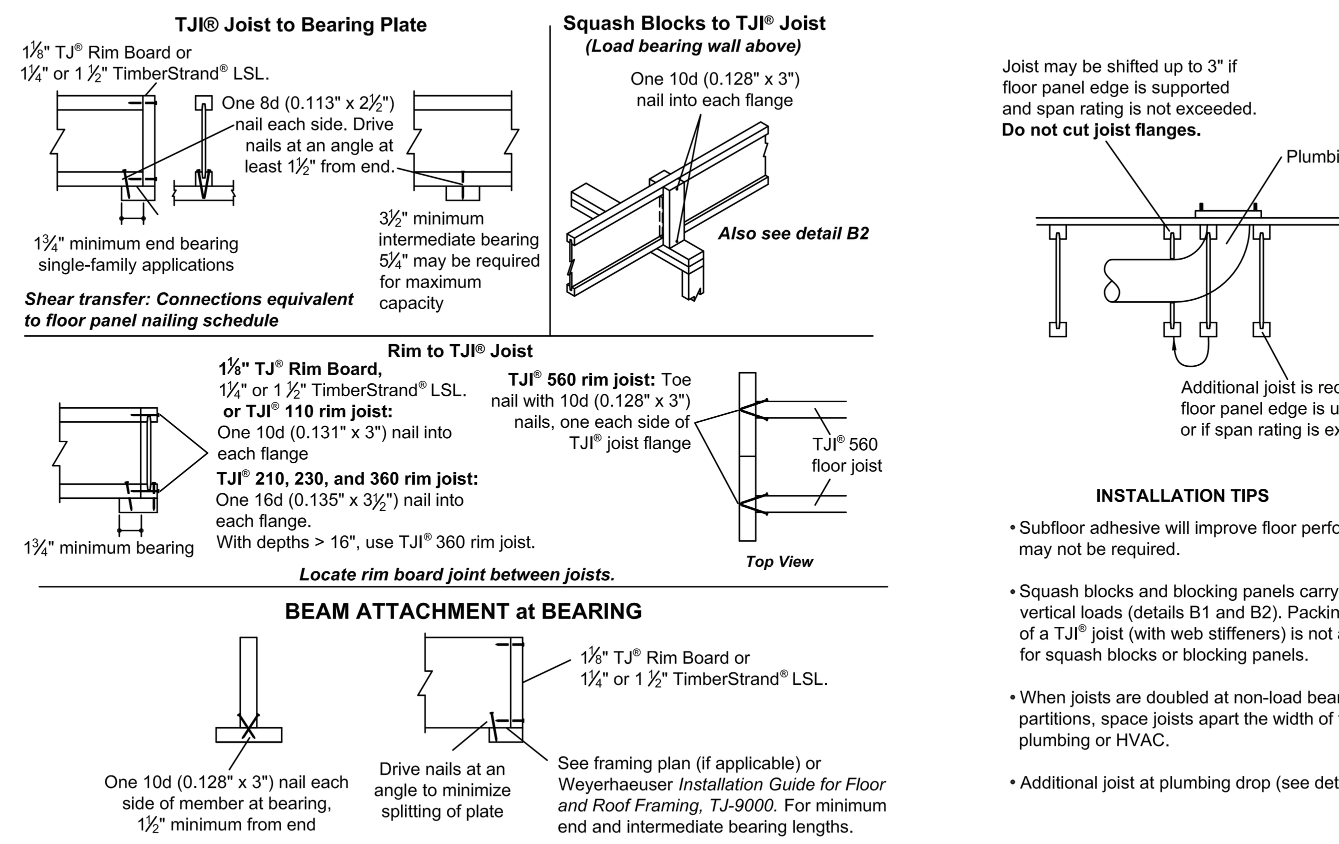

INSTALLATION TIPS

- Subfloor adhesive will improve floor performance, but may not be required.
- Squash blocks and blocking panels carry stacked vertical loads (details B1 and B2). Packing out the web of a TJI® joist (with web stiffeners) is not a substitute for squash blocks or blocking panels.
- When joists are doubled at non-load bearing parallel partitions, space joists apart the width of the wall for plumbing or HVAC.
- Additional joist at plumbing drop (see detail).

FASTENING of FLOOR PANELS

Guidelines for Closest On-Center Spacing per Row

Nail Size	TJI®(1)(2): 110, 210, and 230	TJI®: 360 and 560	Rim Board: 1⅛" TJ® Rim Board	Rim Board: TimberStrand® LSL 1¼"	Rim Board: TimberStrand® LSL 1½"	1¾" TimberStrand® LSL or wider	Microllam® LVL	Parallam® PSL
8d (0.113" x 2½"), 8d (0.131" x 2½")	4"	3"	6"	4"	3"	3"	4"	4"
10d (0.148"x 3"), 12d (0.148"x 3¼")	4"(3)	4"(3)	6"	4"	3"	3"	5"	4"
16d (0.162"x 3½")	6"	6"	16"(4)	6"(5)	6"(5)	6"(6)	8"(4)	6"

(1) Stagger nails when using 4" on-center spacing and maintain ⅜" joist and panel edge distance. One row of fasteners is permitted (two at abutting panel edges) for diaphragms. Fastener spacing for TJI® joists in diaphragm applications cannot be less than shown in table. When fastener spacing for blocking is less than spacing shown above, rectangular blocking must be used in lieu of TJI® joists.
(2) For non-diaphragm applications, multiple rows of fasteners are permitted if the rows are offset at least ½" and staggered.
(3) With 10d (0.148" x 1½") nails, spacing can be reduced to 3" on-center for light gauge steel straps.
(4) Can be reduced to 5" on-center if nail penetration into the narrow edge is no more than 1¼" (to minimize splitting).
(5) Can be reduced to 4" on-center if nail penetration into the narrow edge is no more than 1¼" (to minimize splitting).
(6) Can be reduced to 3½" on-center if nail penetration into the narrow edge is no more than 1¼" (to minimize splitting).

- Recommended nailing is 12" on-center in field and 6" on-center along panel edge. Fastening requirements on engineered drawings supersede recommendations listed above.
- Maximum nail spacing for TJI® joists is 18" on-center.
- 14 ga. staples may be substituted for 8d (0.113" x 2½") nails if minimum penetration of 1" into the TJI® joist or rim board is achieved.
- To minimize splitting, maintain edge distance and row spacing of 2½ x nail diameter or ⅜", whichever is greater.
- Nailing rows must be offset at least ½" and staggered.
- For recommended nailing and adhesives, see INSTALLATION RECOMMENDATIONS on page 2 of the *Weyerhaeuser Installation Guide for Floor and Roof Framing, TJ-9001.*

FILLER and BACKER BLOCK SIZES

TJI® Joists	110	110	210	210	230 or 360	230 or 360	360	560	560	560	560D
Depth	9½"-11⅞"	14"-16"	9½"-11⅞"	14"-16"	9½"-11⅞"	14"-16"	18"-20"	11⅞"	14"-16"	18"-20"	22"-24"
Filler Block (1) (Detail H2)	2x6	2x8	2x6 + ⅜" sheathing	2x8 + ⅜" sheathing	2x6 + ½" sheathing	2x8 + ½" sheathing	2x12 + ½" sheathing	Two 2x6	Two 2x8	Two 2x12	Four ¾" x 15" sheathing
Cantilever Filler (Detail E4)	2x6 4'-0" long	2x10 6'-0" long	2x6 + ⅜" sheathing 4'-0" long	2x10 + ⅜" sheathing 6'-0" long	2x6 + ½" sheathing 4'-0" long	2x10 + ½" sheathing 6'-0" long	Not applicable	Not applicable			
Backer Block (1) (Detail F1 or H2)	⅝" or ¾"		¾" or ⅞"		⅞" or 1" Net			2x6	2x8	2x12	Two ¾" x 15" sheathing
Nail Size: Filler	(0.131" x 3")							(0.131" x 3½")			
Nail Size: Backer								(0.131" x 3")			
Nail Quantity(2): Filler	15							32			50
Nail Quantity(2): Backer								15			15

(1) If necessary, increase filler and backer block height for face mount hangers and maintain ⅛" gap at top of joist; see detail W. Filler and backer block dimensions should accomodate required nailing without splitting (12" minimum for backer blocks and 24" minimum for filler blocks).
(2) Clinch nails when possible.

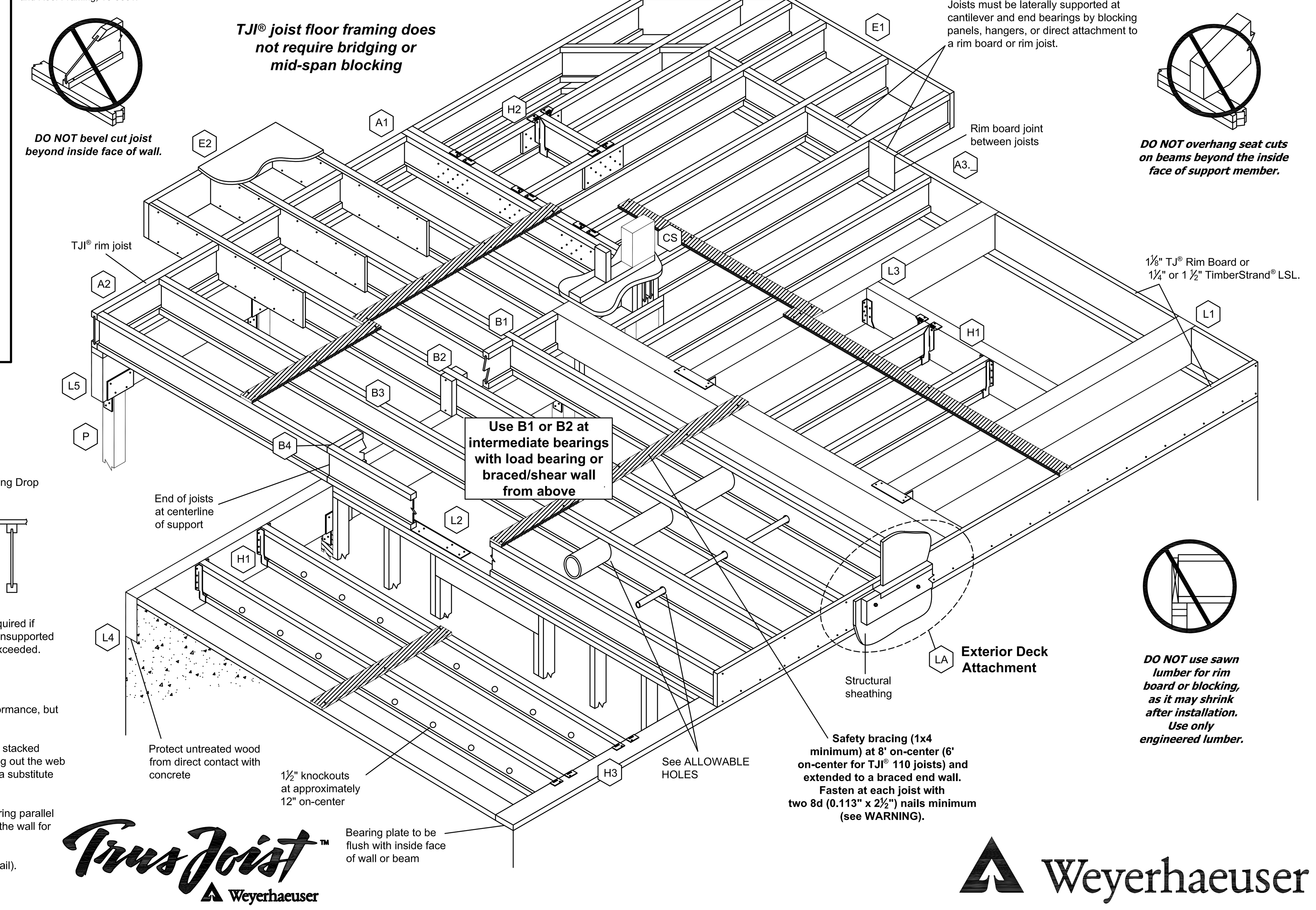

ALLOWABLE HOLES - TJI® Joists

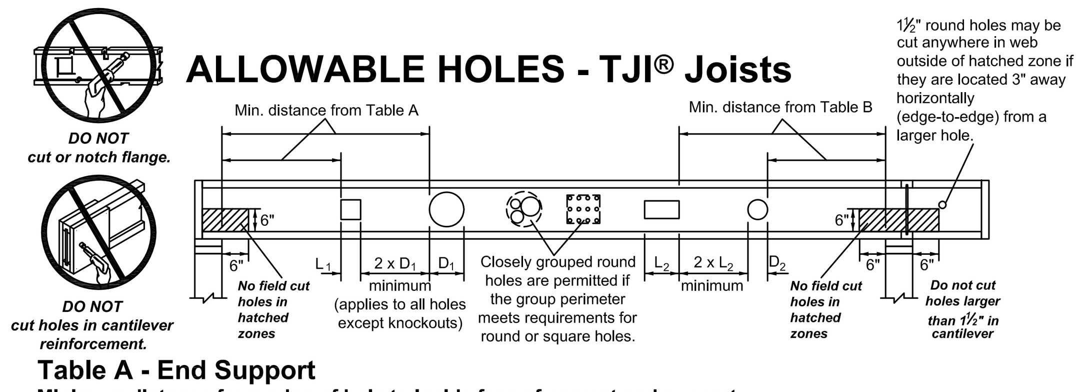

Table A - End Support

Minimum distance from edge of hole to inside face of nearest end support

JOIST DEPTH	TJI®	Round 2"	Round 3"	Round 4"	Round 5"	Round 6½"	Round 7"	Round 8⅞"	Round 11"	Round 13"	Sq./Rect. 2"	Sq./Rect. 3"	Sq./Rect. 4"	Sq./Rect. 5"	Sq./Rect. 6½"	Sq./Rect. 7"	Sq./Rect. 8⅞"	Sq./Rect. 11"	Sq./Rect. 13"
9½"	110	1'-0"	1'-6"	2'-0"	3'-0"	5'-0"					1'-0"	1'-6"	2'-6"	3'-6"	4'-6"				
	210	1'-0"	1'-6"	2'-6"	3'-0"	5'-6"					1'-0"	2'-0"	2'-6"	4'-0"	5'-0"				
	230	1'-6"	2'-0"	2'-6"	3'-6"	5'-6"					1'-0"	2'-0"	3'-0"	4'-6"	5'-0"				
	360	1'-6"	2'-0"	3'-0"	4'-0"	6'-0"					1'-6"	2'-6"	3'-6"	5'-0"	5'-6"				
	560	1'-6"	2'-6"	3'-6"	5'-0"	7'-0"					2'-0"	3'-0"	4'-0"	5'-6"	6'-0"				
11⅞"	110	1'-0"	1'-0"	1'-6"	2'-0"	2'-6"	3'-0"	5'-6"			1'-0"	1'-6"	2'-0"	2'-6"	4'-6"	5'-0"	6'-0"		
	210	1'-0"	1'-6"	2'-0"	2'-0"	3'-0"	3'-6"	6'-0"			1'-0"	1'-6"	2'-6"	3'-0"	5'-0"	5'-6"	6'-6"		
	230	1'-0"	1'-6"	2'-0"	2'-6"	3'-0"	3'-6"	6'-6"			1'-0"	2'-0"	2'-6"	3'-6"	5'-6"	5'-6"	7'-0"		
	360	1'-6"	2'-0"	3'-0"	3'-6"	4'-6"	5'-0"	7'-0"			1'-6"	2'-6"	3'-6"	4'-6"	6'-6"	6'-6"	7'-6"		
	560	1'-6"	2'-6"	3'-0"	4'-0"	5'-6"	6'-0"	8'-0"			2'-6"	3'-6"	4'-6"	5'-6"	7'-0"	7'-6"	8'-0"		
14"	110	1'-0"	1'-0"	1'-0"	1'-0"	1'-6"	2'-0"	3'-0"	5'-6"		1'-0"	1'-0"	1'-6"	2'-0"	3'-6"	4'-0"	6'-0"	8'-0"	
	210	1'-0"	1'-0"	1'-0"	1'-6"	2'-0"	2'-6"	3'-6"	6'-0"		1'-0"	1'-0"	2'-0"	2'-6"	4'-0"	4'-6"	6'-6"	8'-6"	
	230	1'-0"	1'-0"	1'-0"	1'-6"	2'-6"	2'-6"	4'-0"	7'-0"		1'-0"	1'-0"	2'-0"	3'-0"	4'-0"	5'-0"	7'-0"	9'-0"	
	360	1'-0"	1'-0"	1'-6"	2'-6"	3'-6"	4'-0"	5'-6"	8'-0"		1'-0"	1'-6"	2'-6"	4'-0"	6'-0"	6'-6"	8'-0"	9'-6"	
	560	1'-0"	1'-0"	2'-0"	3'-0"	4'-6"	5'-0"	6'-6"	9'-0"		1'-6"	3'-0"	4'-0"	5'-0"	7'-0"	7'-6"	9'-0"	10'-0"	
16"	110	1'-0"	1'-0"	1'-0"	1'-0"	1'-0"	1'-0"	2'-0"	3'-0"	5'-0"	1'-0"	1'-0"	1'-0"	1'-6"	3'-0"	3'-0"	5'-6"	7'-6"	10'-0"
	210	1'-0"	1'-0"	1'-0"	1'-0"	1'-0"	1'-6"	2'-6"	3'-6"	6'-0"	1'-0"	1'-0"	1'-0"	2'-0"	3'-0"	3'-6"	6'-6"	8'-0"	11'-0"
	230	1'-0"	1'-0"	1'-0"	1'-0"	1'-6"	1'-6"	3'-0"	4'-0"	7'-0"	1'-0"	1'-0"	1'-0"	2'-0"	3'-6"	4'-0"	7'-0"	9'-0"	11'-0"
	360	1'-0"	1'-0"	1'-0"	1'-0"	2'-6"	2'-6"	4'-6"	6'-6"	9'-0"	1'-0"	1'-0"	1'-6"	3'-0"	5'-0"	5'-6"	9'-0"	10'-0"	11'-6"
	560	1'-0"	1'-0"	1'-0"	1'-0"	2'-6"	3'-0"	5'-0"	7'-6"	10'-0"	1'-0"	2'-0"	3'-0"	4'-6"	6'-6"	7'-0"	10'-0"	11'-0"	12'-0"
		4"	6"	7"	8"	10"	12"	14¾"	16¾"		4"	6"	7"	8"	10"	12"	14¾"	16¾"	
18"	360	1'-0"	1'-0"	1'-0"	2'-0"	4'-0"	5'-6"	9'-6"			1'-0"	3'-0"	4'-6"	6'-0"	10'-0"	11'-0"	13'-6"		
	560	1'-0"	1'-0"	1'-0"	2'-0"	4'-6"	7'-0"	10'-6"			2'-0"	5'-0"	6'-6"	8'-0"	11'-0"	12'-0"	14'-0"		
20"	360	1'-0"	1'-0"	1'-0"	1'-0"	2'-0"	4'-0"	7'-0"	10'-0"		1'-0"	1'-6"	3'-0"	4'-6"	8'-0"	11'-6"	13'-6"	15'-6"	
	560	1'-0"	1'-0"	1'-0"	1'-0"	2'-0"	4'-6"	8'-6"	11'-0"		1'-0"	3'-6"	5'-0"	7'-0"	10'-6"	13'-0'	14'-6"	15'-6"	

Table B - Intermediate or Cantilever Support

Minimum distance from edge of hole to inside face of nearest intermediate or cantilever support

JOIST DEPTH	TJI®	Round 2"	Round 3"	Round 4"	Round 5"	Round 6½"	Round 7"	Round 8⅞"	Round 11"	Round 13"	Sq./Rect. 2"	Sq./Rect. 3"	Sq./Rect. 4"	Sq./Rect. 5"	Sq./Rect. 6½"	Sq./Rect. 7"	Sq./Rect. 8⅞"	Sq./Rect. 11"	Sq./Rect. 13"
9½"	110	2'-0"	2'-6"	3'-6"	4'-6"	7'-6"					1'-6"	2'-6"	3'-6"	5'-6"	6'-6"				
	210	2'-0"	2'-6"	3'-6"	5'-0"	8'-0"					2'-0"	3'-0"	4'-0"	6'-6"	7'-6"				
	230	2'-6"	3'-0"	4'-0"	5'-6"	8'-6"					2'-0"	3'-6"	4'-6"	6'-6"	7'-6"				
	360	3'-0"	4'-0"	5'-6"	6'-6"	9'-0"					3'-0"	4'-6"	5'-6"	7'-6"	8'-0"				
	560	3'-6"	5'-0"	6'-0"	7'-6"	10'-0"					4'-0"	5'-6"	6'-6"	8'-0"	9'-0"				
11⅞"	110	1'-0"	1'-0"	1'-6"	2'-6"	4'-0"	4'-6"	8'-6"			1'-0"	1'-6"	2'-6"	4'-0"	7'-0"	7'-0"	9'-6"		
	210	1'-0"	1'-0"	2'-0"	3'-0"	4'-6"	5'-0"	9'-0"			1'-0"	2'-0"	3'-0"	4'-6"	8'-0"	8'-0"	10'-0"		
	230	1'-0"	2'-0"	2'-6"	3'-6"	5'-0"	5'-6"	10'-0"			1'-0"	2'-6"	3'-6"	5'-0"	8'-6"	9'-0"	10'-6"		
	360	2'-0"	3'-0"	4'-0"	5'-6"	7'-0"	7'-6"	11'-0"			2'-0"	3'-6"	5'-0"	7'-0"	9'-6"	9'-6"	11'-0"		
	560	1'-6"	3'-0"	4'-6"	5'-6"	8'-0"	8'-6"	12'-0"			3'-0"	4'-6"	6'-0"	8'-0"	10'-6"	11'-0"	12'-0"		
14"	110	1'-0"	1'-0"	1'-0"	1'-0"	2'-0"	2'-6"	4'-6"	8'-6"		1'-0"	1'-0"	1'-0"	2'-6"	5'-0"	6'-0"	9'-0"	12'-0"	
	210	1'-0"	1'-0"	1'-0"	1'-0"	2'-6"	3'-0"	5'-6"	9'-6"		1'-0"	1'-0"	2'-0"	3'-6"	6'-0"	7'-0"	10'-0"	13'-0"	
	230	1'-0"	1'-0"	1'-0"	2'-0"	3'-6"	4'-0"	6'-0"	10'-6"		1'-0"	1'-0"	2'-6"	4'-0"	6'-6"	7'-6"	11'-0"	13'-6"	
	360	1'-0"	1'-0"	2'-0"	3'-6"	5'-6"	6'-0"	8'-6"	12'-6"		1'-0"	2'-0"	4'-0"	5'-6"	9'-0"	10'-0"	12'-0"	14'-0"	
	560	1'-0"	1'-0"	1'-6"	3'-6"	5'-6"	6'-6"	9'-6"	13'-6"		1'-0"	3'-0"	5'-0"	7'-0"	10'-0"	11'-0"	13'-6"	15'-0"	
16"	110	1'-0"	1'-0"	1'-0"	1'-0"	1'-0"	1'-0"	2'-6"	5'-0"	8'-6"	1'-0"	1'-0"	1'-0"	1'-0"	3'-6"	4-6"	8'-6"	11'-6"	15'-0"
	210	1'-0"	1'-0"	1'-0"	1'-0"	1'-0"	1'-0"	3'-6"	6'-0"	10'-0"	1'-0"	1'-0"	1'-0"	1'-6"	4'-6"	5'-6"	10'-0"	12'-6"	16'-0"
	230	1'-0"	1'-0"	1'-0"	1'-0"	1'-6"	2'-0"	4'-0"	6'-6"	11'-0"	1'-0"	1'-0"	1'-0"	2'-6"	5'-0"	6'-0"	10'-6"	13'-6"	16'-6"
	360	1'-0"	1'-0"	1'-0"	1'-0"	3'-0"	4'-0"	6'-6"	10'-0"	13'-6"	1'-0"	1'-0"	2'-0"	4'-0"	7'-6"	8'-6"	13'-0"	14'-6"	17'-0"
	560	1'-0"	1'-0"	1'-0"	1'-0"	2'-6"	3'-6"	7'-0"	11'-0"	15'-0"	1'-0"	1'-0"	3'-6"	5'-6"	9'-0"	10'-0"	14'-6"	16'-0"	18'-0"
		4"	6"	7"	8"	10"	12"	14¾"	16¾"		4"	6"	7"	8"	10"	12"	14¾"	16¾"	
18"	360	1'-0"	1'-0"	1'-6"	3'-0"	6'-0"	9'-0"	14'-6"			1'-0"	4'-0"	6'-6"	9'-0"	14'-6"	16'-6"	19'-0"		
	560	1'-0"	1'-0"	1'-0"	2'-0"	6'-0"	10'-0"	15'-6"			1'-0"	6'-0"	8'-6"	11'-6"	16'-6"	18'-0"	19'-6"		
20"	360	1'-0"	1'-0"	1'-0"	1'-0"	3'-0"	6'-0"	11'-0"	15'-0"		1'-0"	1'-6"	4'-0"	7'-0"	12'-6"	16'-6"	19'-0"	20'-6"	
	560	1'-0"	1'-0"	1'-0"	1'-0"	1'-6"	5'-6"	11'-6"	15'-6"		1'-0"	3'-0"	6'-0"	8'-6"	14'-0"	17'-6'	19'-0"	20'-6"	

Rectangular holes based on measurement of longest side.

- Leave ⅛" of web (minimum) at top and bottom of hole. **DO NOT cut joist flanges.**
- Tables are based on uniform load tables in current design literature.
- For simple span (5' minimum), uniformly loaded joists used in residential applications, one maximum size round hole may be located at the center of the joist span **provided that no other holes occur in the joist.**

ALLOWABLE HOLES - Headers and Beams

1.55E TimberStrand® LSL Headers and Beams

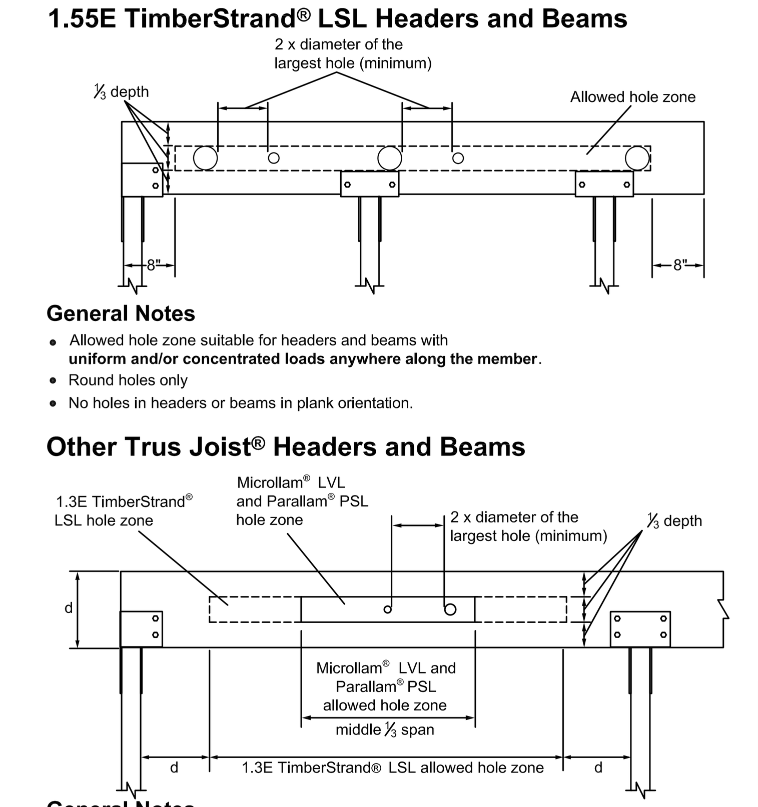

1.55 E TimberStrand® LSL

Header or Beam Depth	Maximum Round Hole Size
9¼"-9½"	3"
11¼"-11⅞"	3⅝"
14"-16"	4⅝"

See illustration for allowed hole zone

General Notes

- Allowed hole zone suitable for headers and beams with **uniform and/or concentrated loads anywhere along the member**.
- Round holes only
- No holes in headers or beams in plank orientation.

Other Trus Joist® Headers and Beams

Other Trus Joist® Beams

Header or Beam Depth	Maximum Round Hole Size
4⅜"	1"
5½"	1¾"
7¼"- 20"	2"

See illustration for Allowed Hole Zone

General Notes

- Allowed hole zone suitable for headers and beams with **uniform loads only.**
- Round holes only
- No holes in cantilevers.
- No holes in headers or beams in plank orientation.

WARNING

Joists are unstable until braced laterally

Bracing Includes:

- Blocking
- Hangers
- Sheathing
- Rim Board
- Strut Lines
- Rim Joist

DO NOT walk on joists until braced. INJURY MAY RESULT.

DO NOT walk on joists that are lying flat.

DO NOT stack building materials on unsheathed joists. Stack only over beams or walls.

WARNING NOTES:

Lack of proper bracing during construction can result in serious accidents. Observe the following guidelines:

1. All blocking, hangers, rim boards and rim joists at the end supports of the TJI® joists must be completely installed and properly nailed.
2. Lateral strength, like braced end wall or an existing deck, must be established at the ends of the bay. This can also be accomplished by a temporary or permanent deck (sheathing) fastened to the first 4 feet of joists at the end of the bay.
3. Safety bracing of 1x4 (minimum) must be nailed to a braced end wall or sheathed area (as in note 2) and to each joist. Install bracing with 2 - 8d(.0113" x 2.5") nails each joist and end support at 8 ft on center (6 ft for TJI 110 joists). Without this bracing, buckling sideways or rollover is highly probable under light construction loads - such as a worker or one layer of unnailed sheathing
4. Sheathing must be completely attached to each TJI® joist before additional loads can be placed on the system.
5. Ends of cantilevers require safety bracing on both the top and bottom flanges.
6. The flanges must remain straight within 1/2" from true alignment.
7. See www.wy.com/besafe for additional installation information.

Warning: Drilling, sawing, sanding or machining wood products generates wood dust. The paint and/or coating on this product may contain titanium dioxide. Wood dust and titanium dioxide are substances known to the state of California to cause cancer. For more information on Proposition 65, visit wy.com/inform.

SUSTAINABLE FORESTRY INITIATIVE Certified Sourcing www.sfiprogram.org SFI-00008

Weyerhaeuser, Microllam, Parallam, TimberStrand, TJI, TJ, and Trus Joist are registered trademarks of Weyerhaeuser NR. © 2022 Weyerhaeuser NR Company. All rights reserved.

September 2020 Reorder TJ-4015

Weyerhaeuser
1.888.453.8358
weyerhaeuser.com

REV	BY	DATE	COMMENT

PROJECT #:

SERVICE #:

SHEET _ of _

This sheet is intended as a supplement to the Weyerhaeuser *Installation Guide for Floor and Roof Framing*, TJ-9001, and the *Deep Depth Trus Joist TJI Joist Installation Guide*, TJ-9006, which should be referenced for additional information.